CavitySlider™ Pocket Frame

The **CS Cavity Slider™** is a practical solution for those areas where there is not enough space for a swinging door. Unlike other pocket systems, the CS Cavity Slider™ is structurally robust due to its construction from aluminum extrusions.

This product is supplied as a kitset and is easy to assemble and install. The pocket frame accommodates 1-3/8″ and 1-3/4″ doors (35mm and 44.5mm) up to 4′0″ x 8′0″ (1220 x 2438mm) and can be cut down to size on site.

The CS Cavity Slider™ is suitable for residential and commercial projects as it meets Type 1 construction code without any combustible materials. In addition to its space saving attributes in restrooms, hallways and laundries, it can be used with confidence for architectural feature openings around your project.

Bi-Parting CS Cavity Sliders™ with wooden doors.

CS Cavity Sliders™ with glazed aluminum doors and CL100 ADA LaviLock handles.

CS Cavity Slider™ kitset box.

CavitySlider™ Features

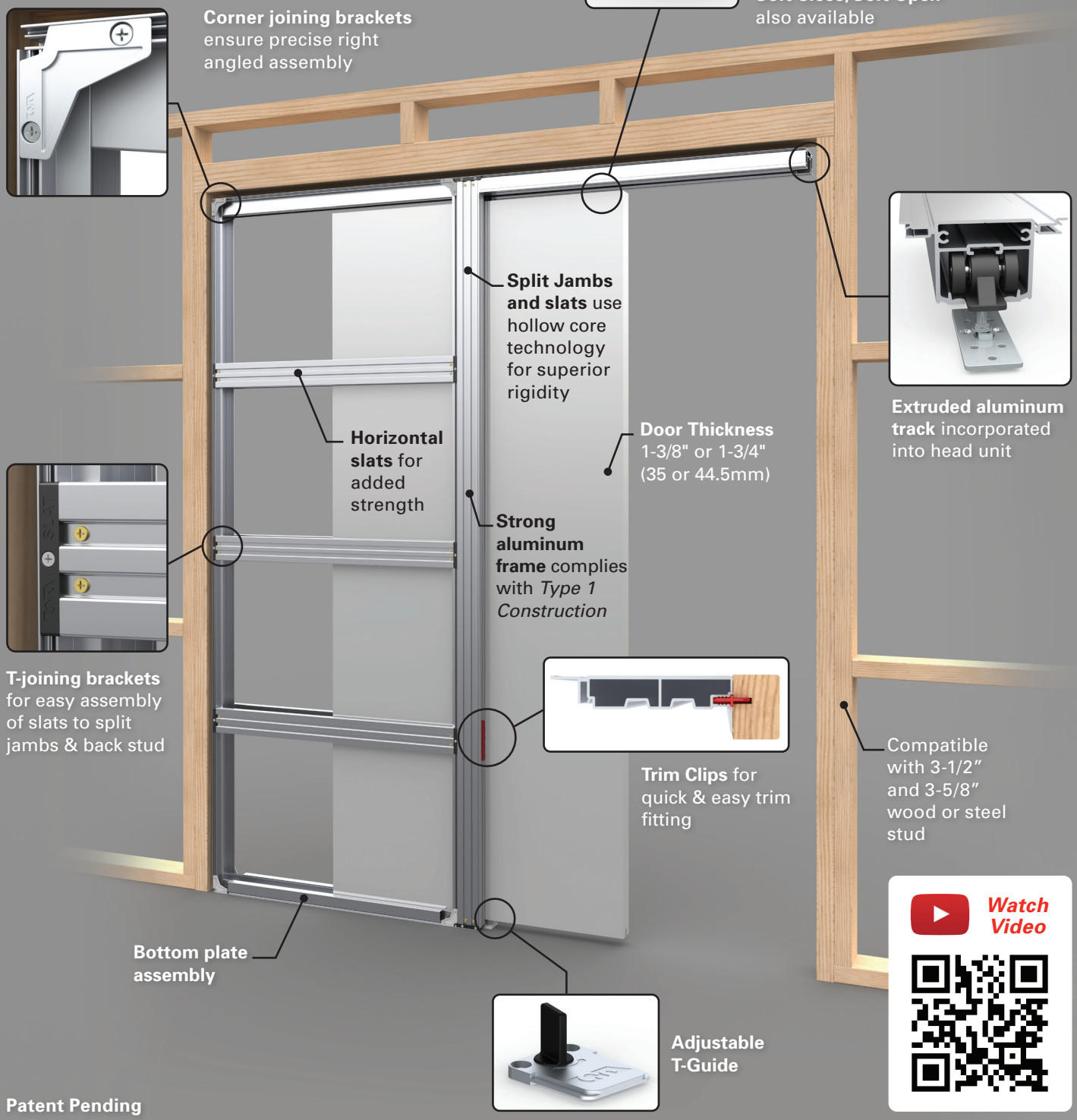

Patent Pending

Cycle tested 1 million openings

ADA compliant

Available with SofStop®

Single or Bi-Parting units

Maximum door weight

Easy assembly

CavitySlider™ Technical Info

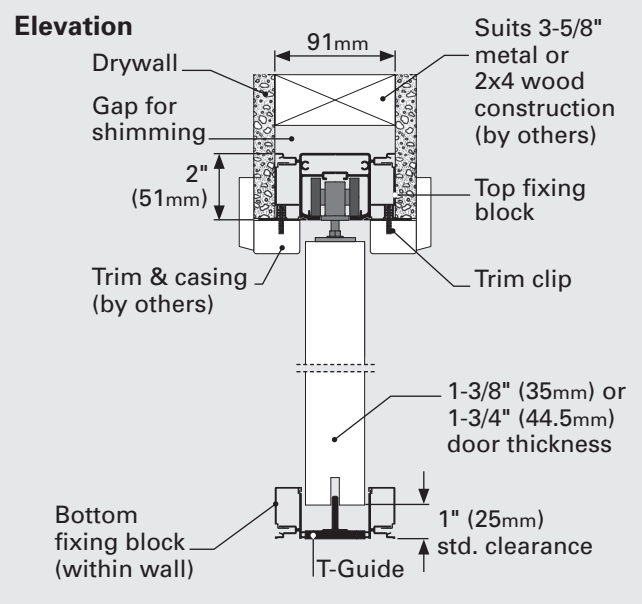

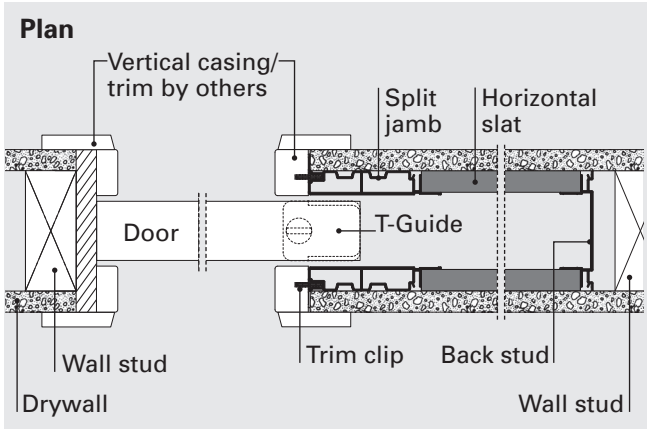

Rough Opening

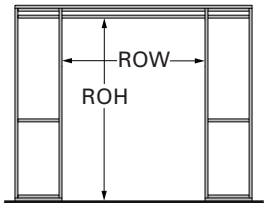

DH = Door Height
DW = Door Width

Dimension	inches	mm
RO height	DH + 4¼"	DH + 108
RO width - Single	(DW x 2) + 2"	(DWx2) + 51
RO width - Bi-Parting	(DW x 4) + 2"	(DWx4) + 51

Standard CS Track Features

Our engineers focus on constantly developing new products and refining existing ones.
That's why our products come with a number of unique features:

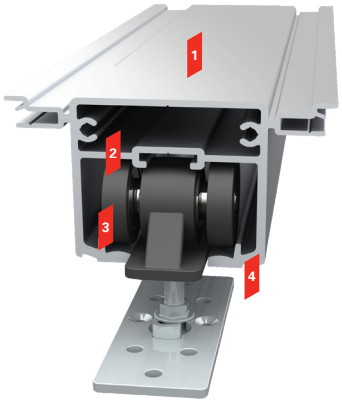

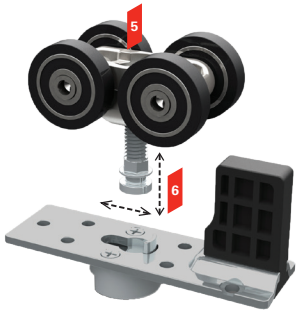

1. Heavy duty one-piece extruded aluminum track.
2. Minimal clearance means the carriages/ wheels cannot jump off the track or jam.
3. Large diameter wheels with precision ground bearings make for smooth running.
4. Radiused track reduces friction and allows dust to be pushed into the gutters so the door always slides smoothly.
5. M8 body made from cast stainless steel for strength and reliability. 4-wheel carriages are standard on all doors over 200lb.
6. **CarriSnap™** quick release system allows the door to be removed easily from the track; no need to unscrew anything and lose door height adjustment.

How to Order

1. **Choose Size**
   Frames can be cut down on site. Maximum size for each model shown below:

Model	Max Door Size (in)	Max Door Size (mm)
CS 3068	3'0" x 6'8"	914 x 2032mm
CS 3080	3'0" x 8'0"	1066 x 2438mm
CS 4080	4'0" x 8'0"	1219 x 2438mm

For doors heights above 8', please contact us.

2. **Choose a carriage pack** (one per door)
   (includes carriages, mounting plates, T-Guide, fixing screws and adjusting wrench)
   Packs are available with 0, 1 or 2 track stops.

Standard	**M6** (200lb/90kg)	
	M8 (500lb/240kg)	
SofStop® **Single Soft Close**	**Minimum Door Width**	
	No stop	**1 Stop**
0 - 176 lb (80kg)	25" (635mm)	28" (711mm)
176 - 264 lb (120kg)	28" (711mm)	31" (787mm)
SofStop® **Twin**	**No stop**	**1 Stop**
0 - 176 lb (80kg)	33" (840mm)	36" (914mm)

To use SofStop Twin for 32" door width, contact us for instructions.

www.cavitysliders.com

High quality frames made in USA

T (888) 466 0030
F (310) 769 5824
E info@cavitysliders.com

Cavity Sliders USA Inc.

548 Finney Ct
Gardena
CA 90248

Another quality product from:
CavitySliders™
The Pocket Door Experts

© All copyright and other property in this document is reserved by Cavity Sliders USA Inc. Details and specifications are subject to change without notice. Whilst all care is taken to ensure the accuracy of all information, no responsibility will be accepted for any errors or omissions.
CS Cavity Slider. 61213 - 07.2019