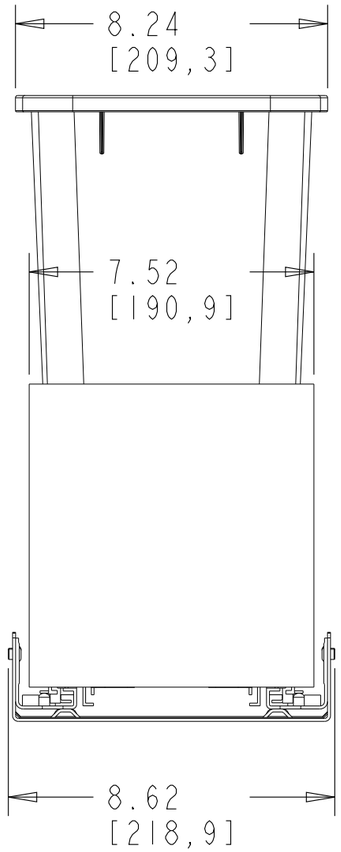

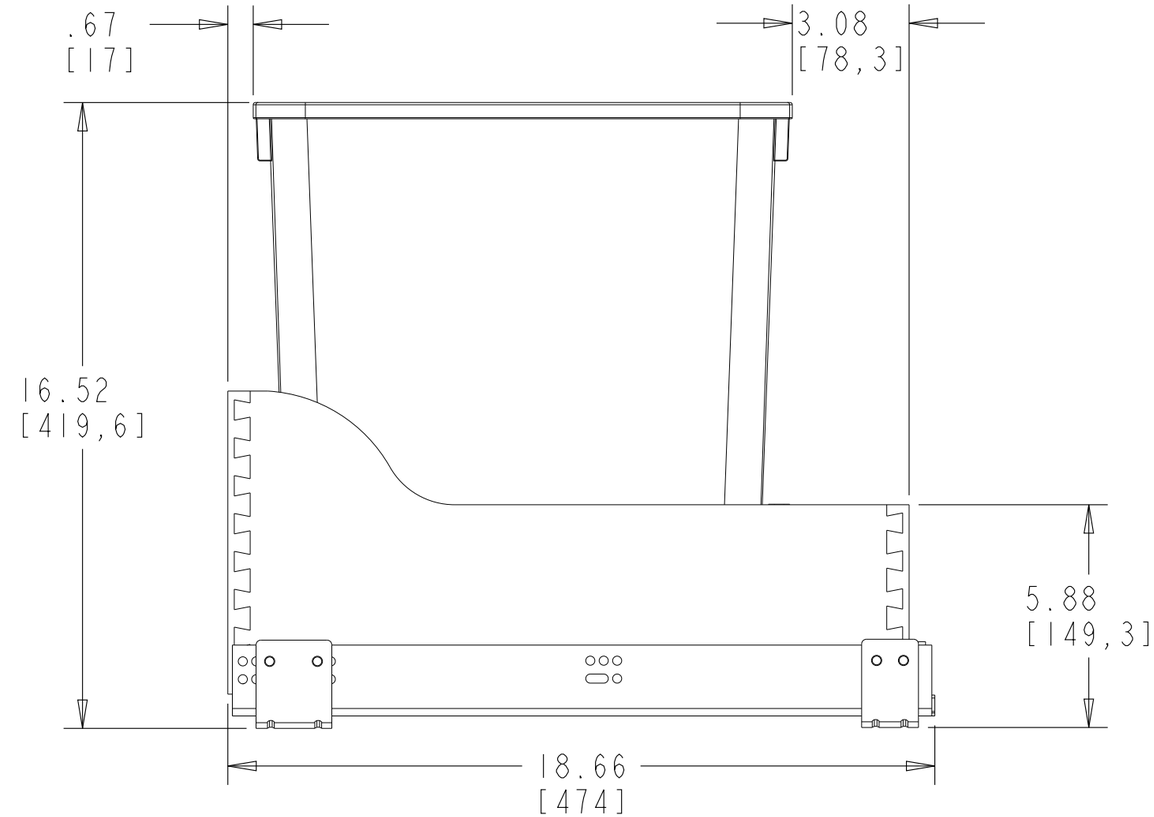

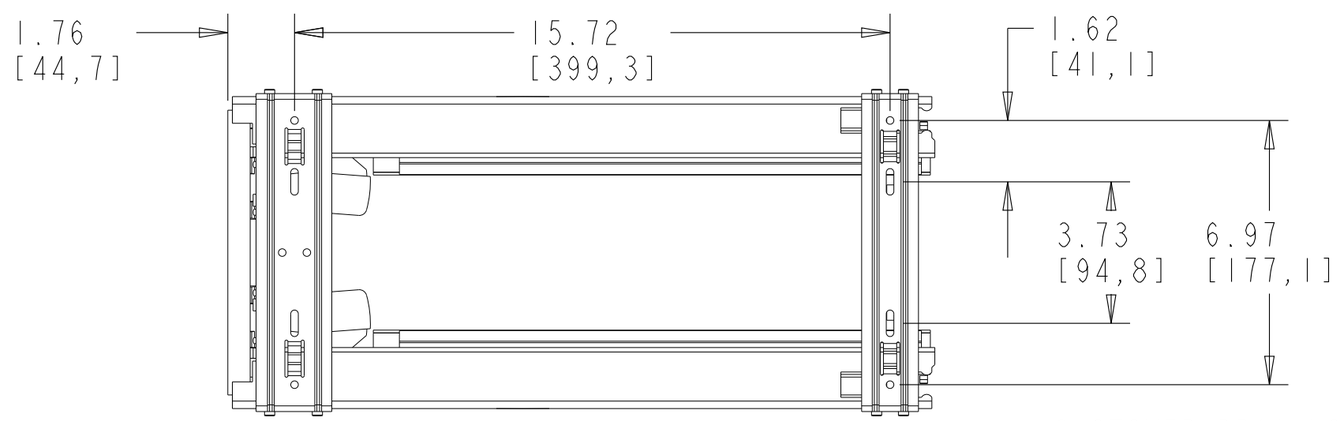

CUSTOMER DRAWING

REV.	DATE	BY	DESCRIPTION OF CHANGE

INCH [MM] — AMERICAN PROJECTION

	BY	DATE
DRAWN	LCS	6/24/22

TOLERANCES
MAT. DEC.
(WOOD) .XX ±.03 [.8mm]
(OTHER) .XX ±.02 [.5mm]
(ALL) .XXX ±.005 [.13 mm]
FRACTIONS ±1/32 [.8 mm]
ANGLES ±1/2°

REV-A-SHELF® INC.

SIZE B — BOTTOM MOUNT WASTE CONTAINER VANITY BASE 20QT CAN

MATERIAL

FINISH

DRAWING NO. 4WCSC-1220-19-1

SCALE 0.250

PART NO. 4WCSC-1220-19-1

SHEET 1 OF 2

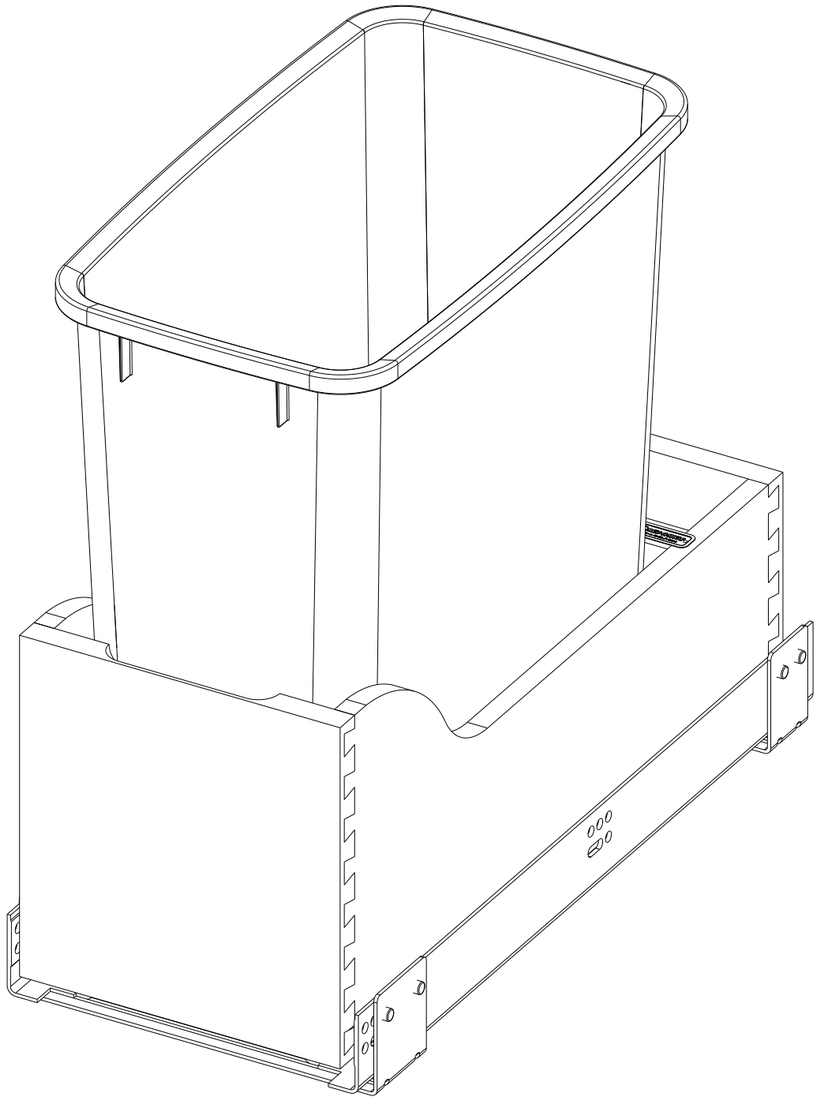

PART DIMENSIONS	
WIDTH	8.62
DEPTH	18.66
HEIGHT	16.52
CONTAINTER CAPACITY	20
CONTAINER UOM	QT

MIN CABINET OPENING				
	FACE FRAME	FRAMELESS	INSET FACE FRAME	INSET FRAMELESS
WIDTH	8.75	8.75	8.75	8.75
DEPTH	18.75	18.75	19.50	19.50
HEIGHT	17.00	17.00	17.00	17.00

SLIDE SPECIFICATIONS				
SLIDE MANUFACTURER	BLUM			
SLIDE PART NUMBER	WCSC128-SLIDESET	RELEASE PART NUMBER	N/A	
SLIDE TYPE	BLUM TANDEM	SLIDE EXTENSION	FULL EXTENSION	MAX WEIGHT RATING
SLIDE CLOSING	SOFT-CLOSE	SLIDE LENGTH	18" [457]	
SLIDE MOUNTING	BOTTOM	SLIDE FINISH	ZINC	110LB DYNAMIC

CUSTOMER DRAWING

REV.	DATE	BY	DESCRIPTION OF CHANGE

INCH [MM] — AMERICAN PROJECTION

	BY	DATE
DRAWN	LCS	6/24/22

REV-A-SHELF® INC.

SIZE B — BOTTOM MOUNT WASTE CONTAINER VANITY BASE 20QT CAN

TOLERANCES
MAT. DEC.
(WOOD) .XX ±.03 [.8mm]
(OTHER) .XX ±.02 [.5mm]
(ALL) .XXX ±.005 [.13 mm]
FRACTIONS ±1/32 [.8 mm]

ANGLES ±1/2°

MATERIAL

FINISH

DRAWING NO. 4WCSC-1220-19-1

PART NO. 4WCSC-1220-19-1

SCALE 0.325

SHEET 2 OF 2