	MIN	MAX
A	17.50	19.58
B	21.75	24.00

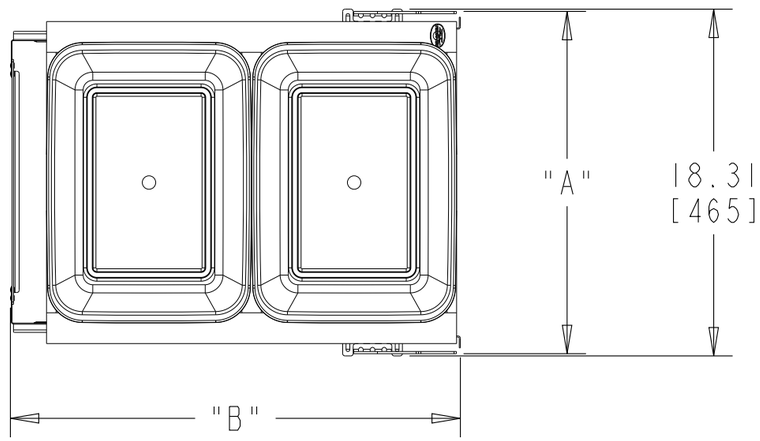

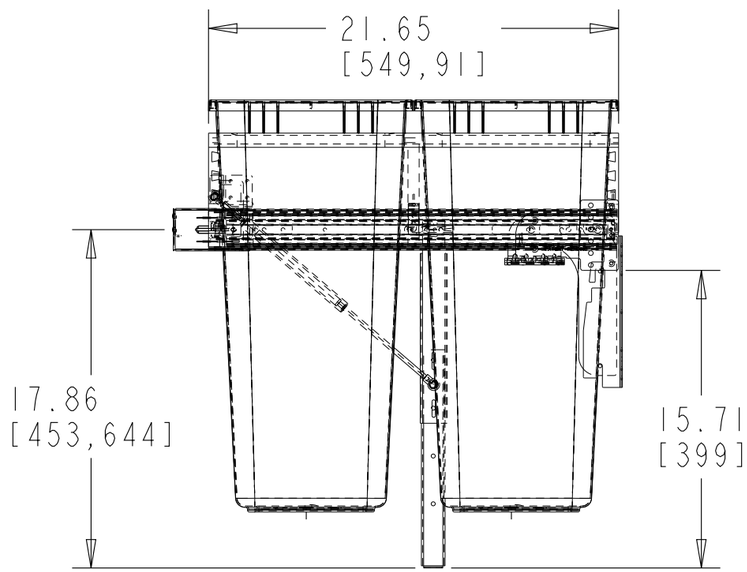

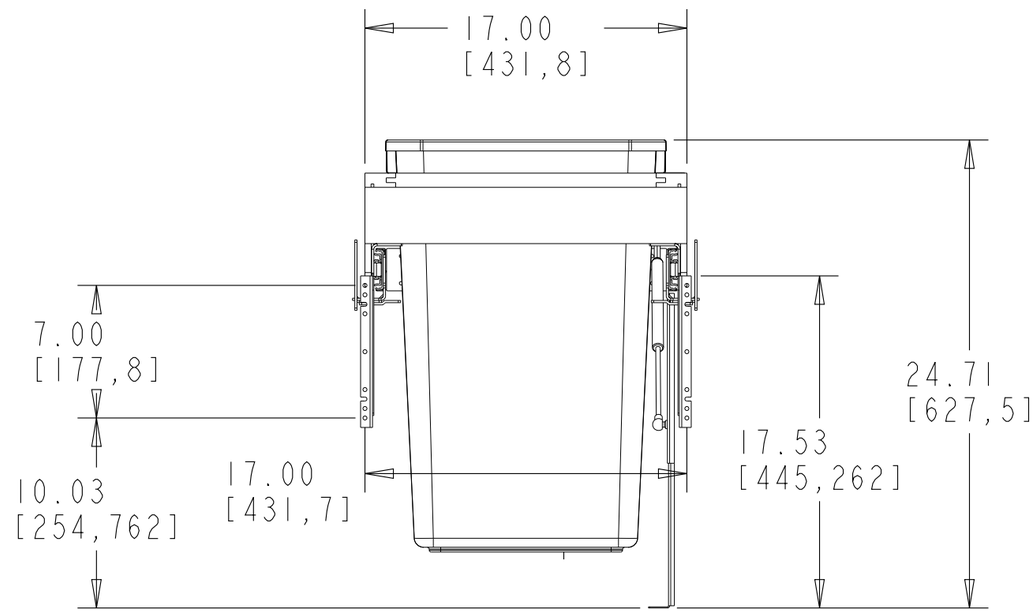

CUSTOMER DRAWING

This drawing is the property of Rev-A-Shelf (RAS) and is disclosed in confidence to the extent its subject matter is original to RAS. Any vendor receiving this drawing from RAS shall hold and use this drawing for the sole benefit of RAS and shall not disclose it to, or use or reproduce it for any third party, or perform any act adverse to the interest of RAS with respect to this drawing without the express written permission of RAS. Vendors shall not revise any physical, dimensional or performance characteristic unless authorized by Rev-A-Shelf Engineering.

REV.	DATE	BY	DESCRIPTION OF CHANGE

INCH [MM] — AMERICAN PROJECTION

	BY	DATE
DRAWN	PFC	4/23/09

TOLERANCES
MAT. DEC.
(WOOD) .XX ±.03 [.8mm]
(OTHER) .XX ±.02 [.5mm]
(ALL) .XXX ±.005 [.13 mm]
FRACTIONS ±1/32 [.8 mm]
ANGLES ±1/2°

REV-A-SHELF®, INC.

SIZE B — REV-A-MOTION TOP MOUNT DOUBLE 50 QT

MATERIAL N/A

FINISH N/A

DRAWING NO. 4WCTM-RM-2150DM-2_CUSTOMER

PART NO. 4WCTM-RM-2150DM-2

SCALE 0.125

SHEET 1 OF 2

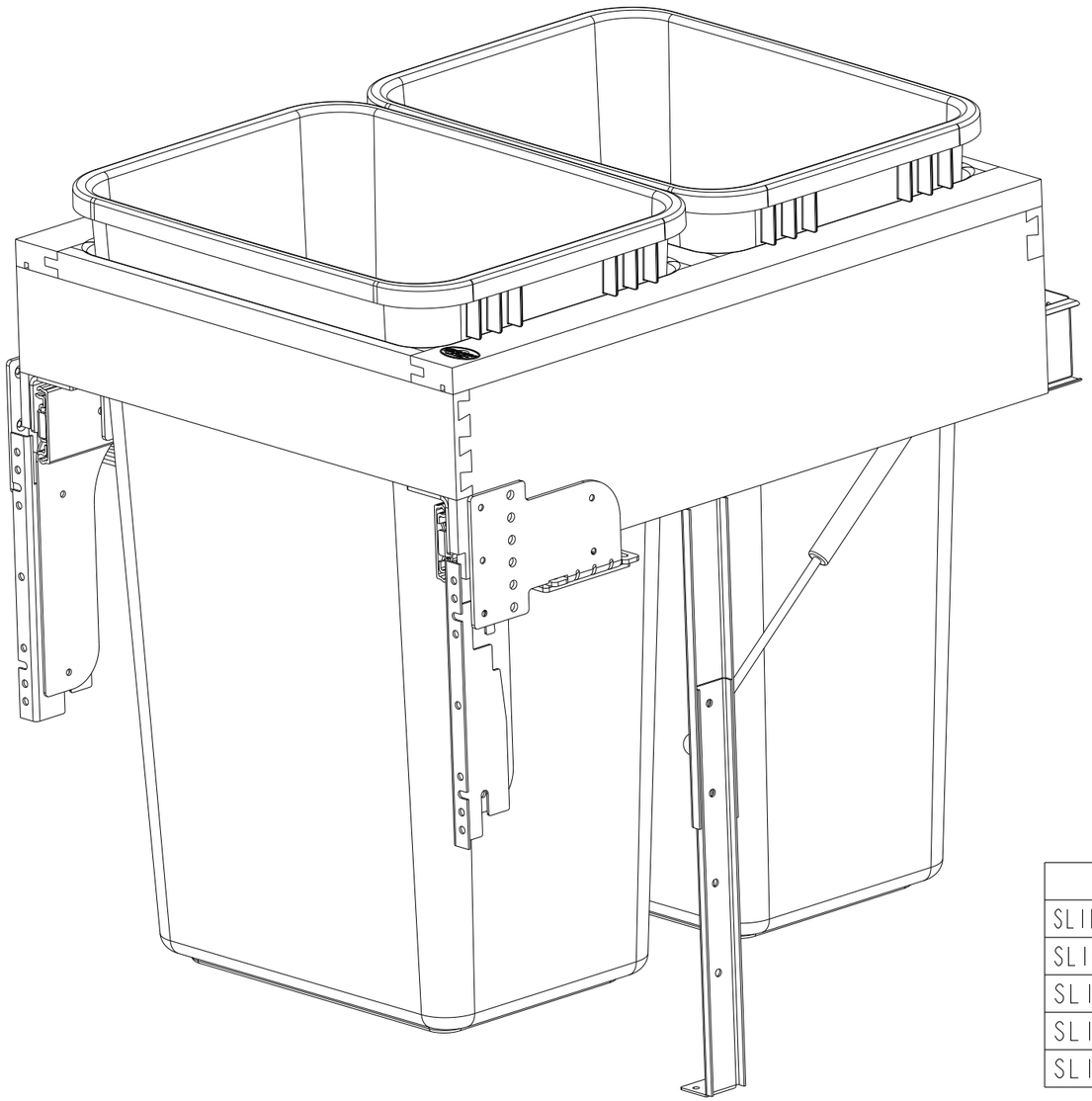

PART DIMENSIONS		
	MIN	MAX
WIDTH	18.31	
DEPTH	21.75	24.00
HEIGHT	24.75	
CONTAINTER CAPACITY	50	
CONTAINER UOM	QT	

MIN CABINET OPENING				
	FACE FRAME	FRAMELESS	INSET FACE FRAME	INSET FRAMELESS
WIDTH	17.50	18.31	17.50	18.31
DEPTH	21.75	21.75	22.50	22.50
HEIGHT	25.00	25.00	25.00	25.00

SLIDE SPECIFICATIONS				
SLIDE MANUFACTURER				
SLIDE PART NUMBER	FX80215	RELEASE PART NUMBER		
SLIDE TYPE	BALL BEARING	SLIDE EXTENSION	1.50" O.T.	MAX WEIGHT RATING
SLIDE CLOSING	SOFT	SLIDE LENGTH	21.50" [550,0]	
SLIDE MOUNTING	SIDE	SLIDE FINISH	ZINC	150LB

CUSTOMER DRAWING

This drawing is the property of Rev-A-Shelf (RAS) and is disclosed in confidence to the extent its subject matter is original to RAS. Any vendor receiving this drawing from RAS shall hold and use this drawing for the sole benefit of RAS and shall not disclose it to, or use or reproduce it for any third party, or perform any act adverse to the interest of RAS with respect to this drawing without the express written permission of RAS. Vendors shall not revise any physical, dimensional or performance characteristic unless authorized by Rev-A-Shelf Engineering.

REV.	DATE	BY	DESCRIPTION OF CHANGE

INCH [MM] — AMERICAN PROJECTION

	BY	DATE
DRAWN	PFC	4/23/09

TOLERANCES
MAT. DEC.
(WOOD) .XX ±.03 [.8mm]
(OTHER) .XX ±.02 [.5mm]
(ALL) .XXX ±.005 [.13 mm]
FRACTIONS ±1/32 [.8 mm]
ANGLES ±1/2°

MATERIAL
FINISH

REV-A-SHELF®, INC.

SIZE B — REV-A-MOTION TOP MOUNT DOUBLE 50 QT

DRAWING NO. 4WCTM-WNRM-2150DM-2_CUSTOMER

SCALE 0.250

PART NO. 4WCTM-RM-2150DM-2

SHEET 2 OF 2