

AN 161 3D FVZ 14/40

For 40 mm (1.575") thick residential doors up to 14 mm (0.551") recessed frame facings up to 60 kg (132 lbs.)

Product features

- Completely concealed hinge system
- FVZ = for recessed frame facings
- Recessed frame facings up to 14 mm (0.551")
- Minimum door thickness of 40 mm (1.575")
- For wood and aluminum frames
- For residential doors
- Easily adjustable in three dimensions (side +/- 1.5 mm (0.059"), height +/- 2.5 mm (0.098"), compression +/- 1.0 mm (0.039"))
- Central installation
- Material Zinc Diecast

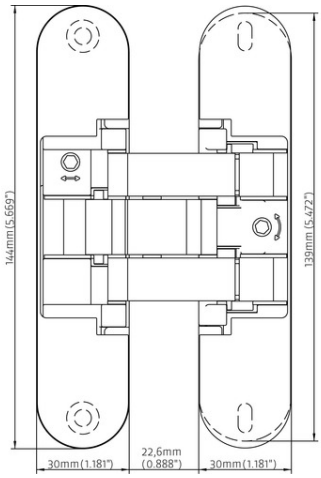

front view

Technical data

Property	Value
Load capacity	60.0 kg (132.0 lbs.)
Overall length	144.0 mm (5.669")
Width (door part)	30.0 mm (1.181")
Width (frame part)	30.0 mm (1.181")
Min. door thickness	40.0 mm (1.574")
Cutter diameter	16.0 mm
Collar ring diameter	27.0 mm

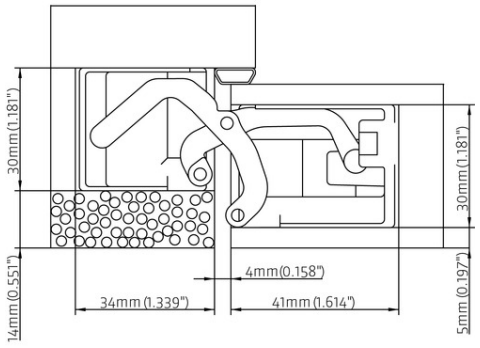

commercial wood frame

16.10.2026 © SIMONSWERK GmbH

Despite the utmost care taken in the preparation of this data sheet, we cannot accept any liability for printing errors or mistakes.

ANSELMI - AN 161 3D FVZ 14/40

Opening angle	180°

Notes

The load capacity mentioned above refers to the use of 2 hinges per door leaf (900 x 2100 mm (35.433 x 82.677")).

Wood screws are included.

Alternatively, the routing can be carried out with a cutter diameter of 1/2" and a collar ring diameter of 1" for imperial templates.

Finishes shown on the model version AN 160 3D. Deviations possible with this model version.

Installation tools

Universal milling frame	
Template 5 251161 6	1/2" router bit / 1" collar ring

Item versions

Finish	Rustic Umber (AN 012)
VPE	pack of 2
DIN	non-handed
ITEM NO.	AN1613D1440-31
EAN	8059606382494

Finish	Black (AN 018)
VPE	pack of 2
DIN	non-handed
ITEM NO.	AN1613D1440-28
EAN	8054608703926

Finish	Aluminum Chrome (AN 036)
VPE	pack of 2
DIN	non-handed
ITEM NO.	AN1613D1440-27

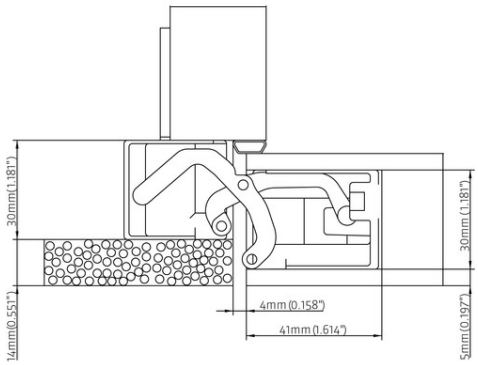

casing wood frame

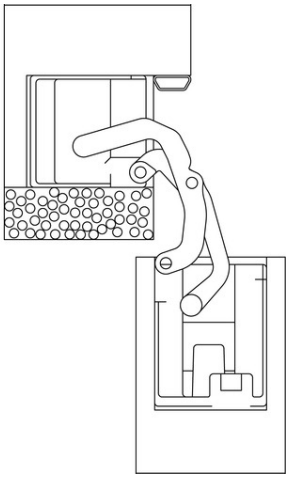

commercial wood frame 90°

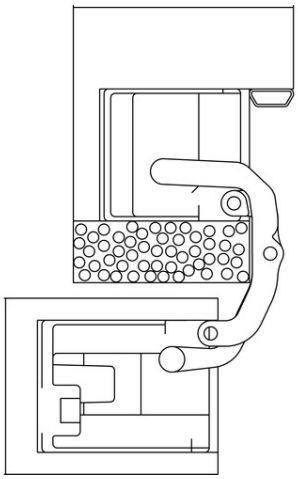

commercial wood frame 180°

16.10.2026 © SIMONSWERK GmbH

Despite the utmost care taken in the preparation of this data sheet, we cannot accept any liability for printing errors or mistakes.

ANSELMI - AN 161 3D FVZ 14/40

EAN	8054608704008

Finish	Satin Nickel (AN 044)
VPE	pack of 2
DIN	non-handed
ITEM NO.	AN1613D1440-29
EAN	8054608703933

Finish	RAL 9016 Traffic White (AN 049)
VPE	pack of 2
DIN	non-handed
ITEM NO.	AN1613D1440-30
EAN	8054608703940

16.10.2026 © SIMONSWERK GmbH

Despite the utmost care taken in the preparation of this data sheet, we cannot accept any liability for printing errors or mistakes.