AN 170 3D

For residential doors with a thickness of 34-45 mm (1.339" - 1.772") with 21 mm (0.827") low profile frame part up to 60 kg (132 lbs.)

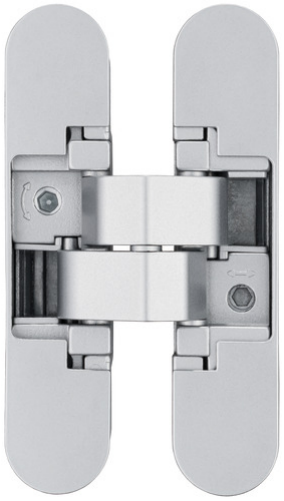

Product features

- Completely concealed hinge system
- Low profile frame part 21 mm (0.827")
- Minimum door thickness of 34 mm (1.339")
- For wood and aluminum frames
- For residential doors
- Easily adjustable in three dimensions (side +/- 1.5 mm (0.059"), height +/- 2.5 mm (0.098"), compression +/- 1.0 mm (0.039"))
- Material Zinc Diecast

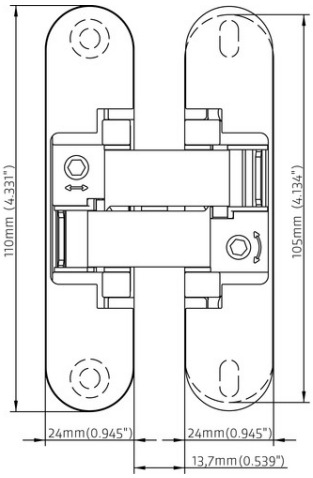

front view

Technical data

Property	Value
Load capacity	60.0 kg (132.0 lbs.)
Overall length	110.0 mm (4.331")
Width (door part)	24.0 mm (0.945")
Width (frame part)	24.0 mm (0.945")
Min. door thickness	33.0 mm (1.299")
Cutter diameter	16.0 mm
Collar ring diameter	27.0 mm
Opening angle	180°

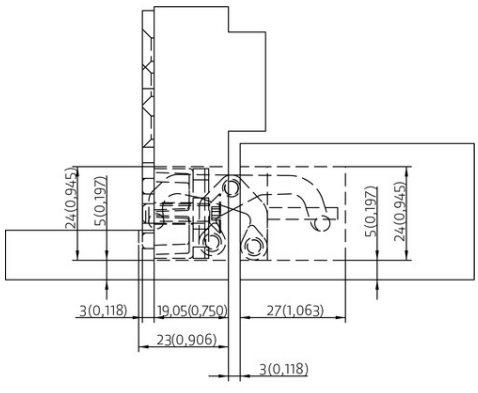

cross section 1

16.10.2026 © SIMONSWERK GmbH

Despite the utmost care taken in the preparation of this data sheet, we cannot accept any liability for printing errors or mistakes.

ANSELMI - AN 170 3D

Notes

The load capacity mentioned above refers to the use of 2 hinges per door leaf (900 x 2100 mm (35.433 x 82.677")).

Wood screws are included.

Alternatively, the routing can be carried out with a cutter diameter of 1/2" and a collar ring diameter of 1" for imperial templates.

Finishes shown on the model version AN 160 3D. Deviations possible with this model version.

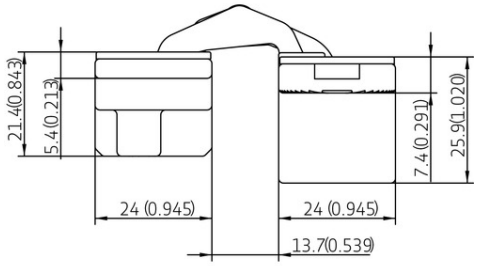

cross section 2

Installation tools

Universal milling frame

Template 5 251156 6	1/2" router bit / 1" collar ring
Template 5 251173 6	24 mm router bit / 30 mm collar ring

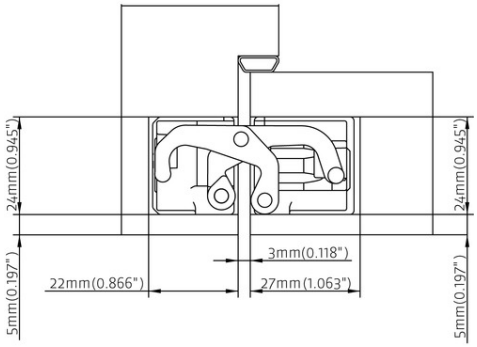

commercial wood frame

Combinations

AN 140 3D FZ

Item versions

Finish	Rustic Umber (AN 012)
VPE	pack of 2
DIN	non-handed
ITEM NO.	AN1703D-000124
EAN	8054608707368

Finish	Black (AN 018)
VPE	pack of 2
DIN	non-handed
ITEM NO.	AN1703D-000126
EAN	8054608707412

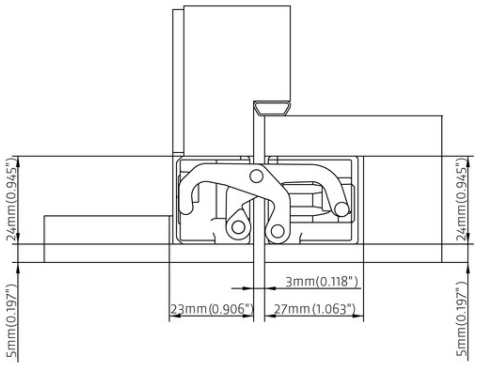

casing wood frame

16.10.2026 © SIMONSWERK GmbH

Despite the utmost care taken in the preparation of this data sheet, we cannot accept any liability for printing errors or mistakes.

ANSELMI - AN 170 3D

Finish	Aluminum Chrome (AN 036)
VPE	pack of 2
DIN	non-handed
ITEM NO.	AN1703D-000130
EAN	8054608707436

Finish	Satin Nickel (AN 044)
VPE	pack of 2
DIN	non-handed
ITEM NO.	AN1703D-000127
EAN	8054608707467

Finish	RAL 9016 Traffic White (AN 049)
VPE	pack of 2
DIN	non-handed
ITEM NO.	AN1703D-000128
EAN	8054608707474

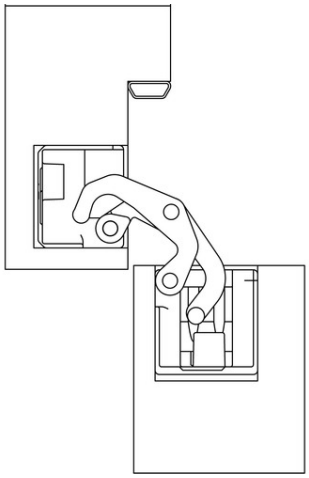

commercial wood frame 90°

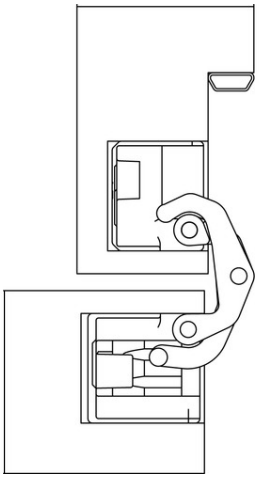

commercial wood frame 180°

16.10.2026 © SIMONSWERK GmbH

Despite the utmost care taken in the preparation of this data sheet, we cannot accept any liability for printing errors or mistakes.