SIMONSWERK

Anselmi & C. S.r.l.
Via Ca' Morelli, 19
31056 Roncade (TV)
Italy
+39 0422 707426
www.anselmisrl.it

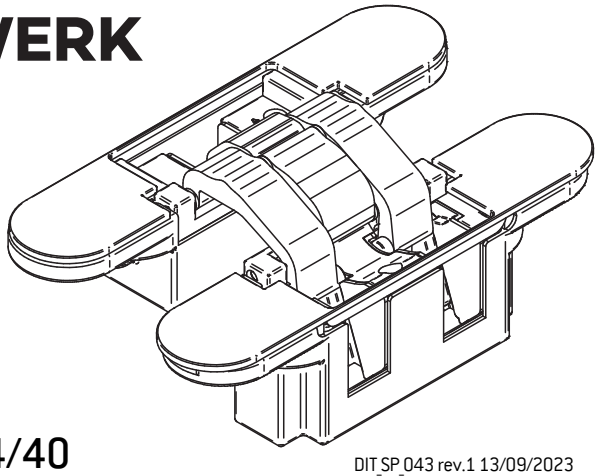

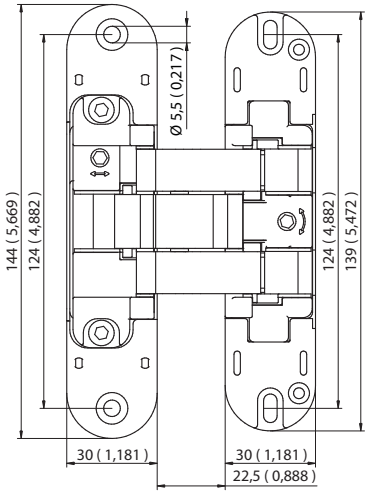

AN 161 3D FVZ 14/40

DIT_SP_043 rev.1 13/09/2023

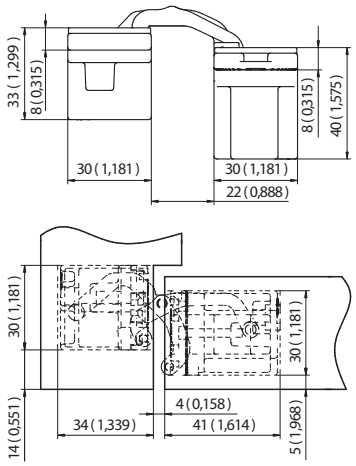

MILLING

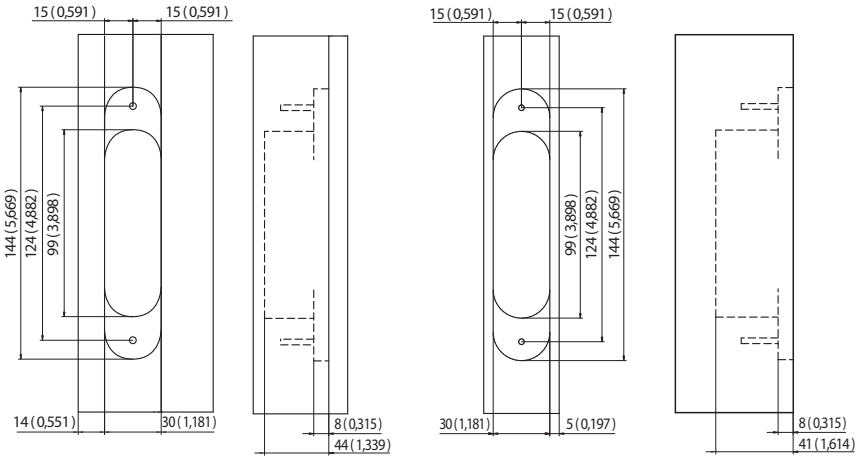

Screw Information

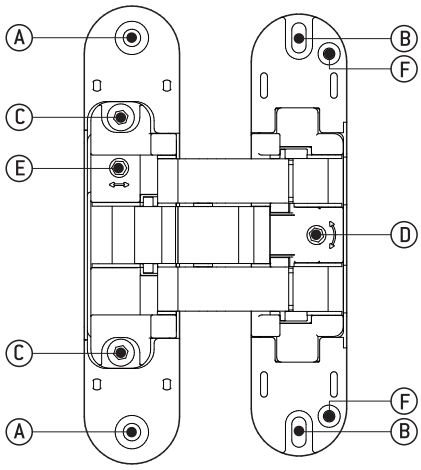

A Screw hole for the hinge to the frame.

B Oval holes for vertical adjustment and anchoring to the door.

C Clamping screw for depth adjustment screw.

D Self-locking screw for side adjustment.

E Depth adjustment screw.

F Additional door fixing hole.

Height Adjustment

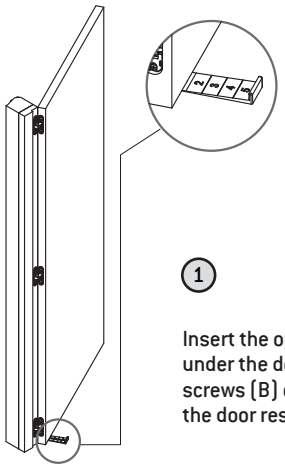

① Insert the optional adjustment wedge under the door and unscrew the anchoring screws (B) of the hinge on the door; the door rests on the wedge.

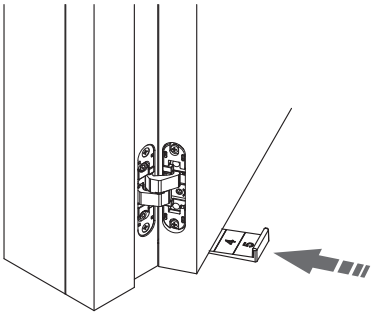

② Slide the wedge under the door until the desired height is achieved, re-tighten the screws.

Depth Adjustment

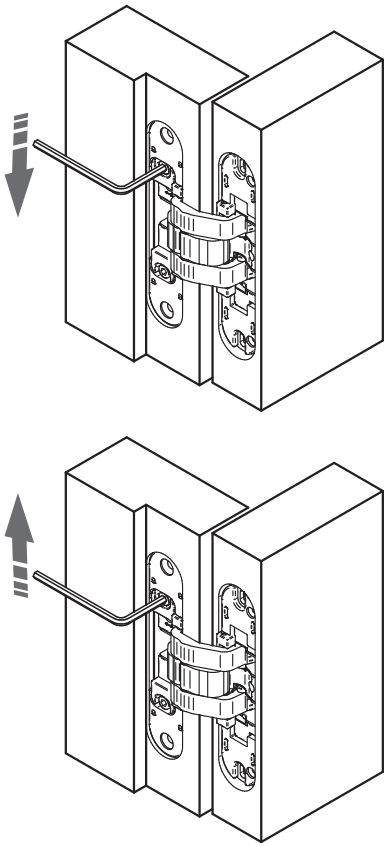

1

Loosen the two clamping screws (C).

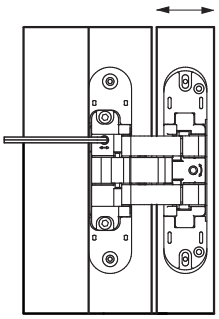

2

Turn the depth adjustment screw (E) to the desired compression.

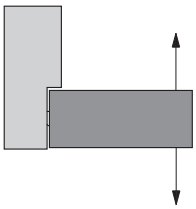

3

Tighten the two clamping screws (C).

Side Adjustment

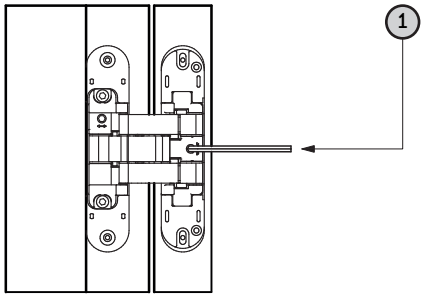

2

Turn the side adjustment screw (D) clockwise for decreasing the air gap by a max. of 1.5 mm (.059").

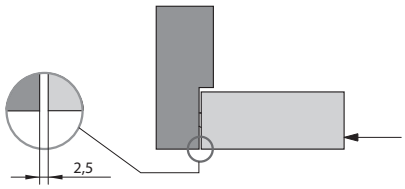

2

Turn the side adjustment screw (D) counterclockwise for increasing the air gap by a max. of 1.5 mm (.059").

