TE 340 3D Energy Kit

With integrated and continuous energy transfer for flush residential doors

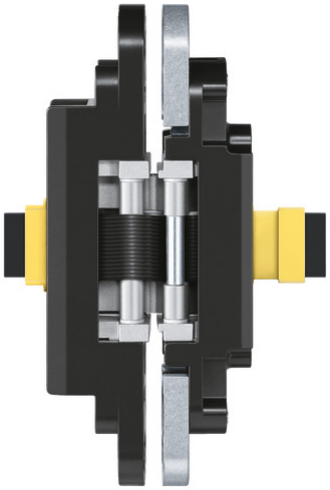

Product features

- Multiple connection adapter options
- Completely concealed hinge system
- For wood, steel, or aluminum door panels and frames
- Finger protection due to a small gap between door and frame
- Easily adjustable in three dimensions (side +/- 3.0 mm (0.118"), height +/- 3.0 mm (0.118"), compression +/- 1.0 mm (0.039"))
- Maintenance-free slide bearings
- UL listed for 20 minute fire door

Technical data

Property	Value
Load capacity	80.0 kg (176.0 lbs.)
Overall length	160.0 mm (6.299")
Width (door part)	28.0 mm (1.102")
Width (frame part)	28.0 mm (1.102")
Min. door thickness	36.0 mm (1.417")
Cutter diameter	24.0 mm
Collar ring diameter	30.0 mm
Opening angle	180°

Quality marks

Certification CE

Certification IFT

Certification UL

Certification UL (Canada)

Classification key

EN 1935 / EAD

3	7	4	1 *1	1	— *2	0	11

*1 Test evidence for functional doors to be achieved with full door sets and assemblies.

*2 depending on the finish

06.11.2026 © SIMONSWERK GmbH

Despite the utmost care taken in the preparation of this data sheet, we cannot accept any liability for printing errors or mistakes.

TECTUS - TE 340 3D Energy Kit

Wire cross section	0.14 mm² (0.006in²)
Max. voltage	50 V
No of wires	16
Max. current	0.8 A

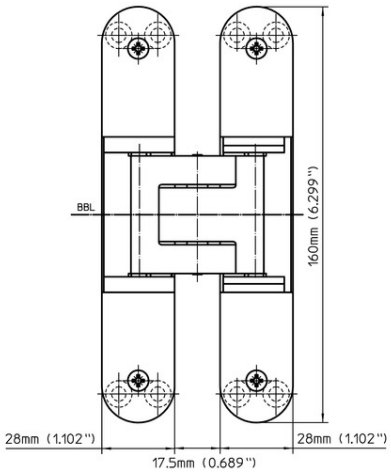

front view

Notes

The load capacity mentioned above refers to the use of 2 hinges per door leaf with a height/width ratio of 2:1.

For a minimum door panel thickness of 38 mm (1-1/2").

For fire rated doors: Check with door manufacturer regarding the usage of additional required intumescent material.

Square-corner cover plates are available upon request.

Please specify accessories when ordering.

Kit includes two 3 m (118.110") round cables.

Alternatively, the routing can be carried out with a cutter diameter of 3/4" and a collar ring diameter of 1" for imperial templates.

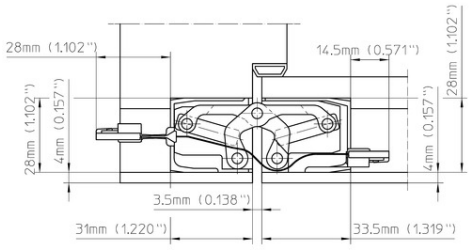

commercial wood frame

Installation tools

Universal milling frame

Template 5 250693 5	24 mm router bit / 30 mm collar ring (step 1)
Template 5 250694 5	24 mm router bit / 30 mm collar ring (step 2)
Template 5 250939 5	flat line routing Energy
Template 5 251058 5	3/4" router bit / 1" collar ring (step 1)
Template 5 251059 5	3/4" router bit / 1" collar ring (step 2)
Template 5 251082 5	3/4" router bit / 1" collar ring (flat line routing Energy)

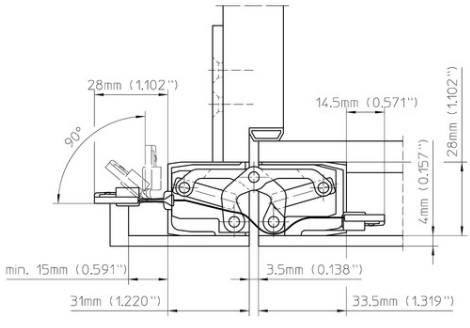

casing wood frame

Combinations

06.11.2026 © SIMONSWERK GmbH

Despite the utmost care taken in the preparation of this data sheet, we cannot accept any liability for printing errors or mistakes.

TECTUS - TE 340 3D Energy Kit

TE 340 3D FZ
TE 340 3D SZ
TE 340 3D ST
Adapter 1 TECTUS Energy
Universal adapter TECTUS Energy
Round cable 3m TECTUS Energy
Round cable 10m TECTUS Energy

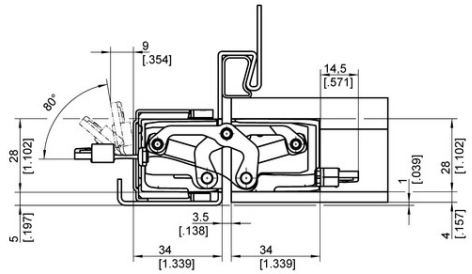

hollow metal frame

Function range

Forced Entry Resistant

Fire Resistant

Smoke Resistant

Sets

TE 340 3D Energy	With integrated and continuous energy transfer for residential doors
Round cable 3m TECTUS Energy	3 m (118.110") round cable with open end

Item versions

Finish	Satin Chrome (SW 146)
VPE	pack of 1
DIN	non-handed
ITEM NO.	7 400659 0 14601
EAN	

Finish	Polished Brass (SW 030)
VPE	pack of 1
DIN	non-handed
ITEM NO.	7 400659 0 03001
EAN	

Finish	Polished Nickel (SW 038)
VPE	pack of 1
DIN	non-handed
ITEM NO.	7 400659 0 03801

06.11.2026 © SIMONSWERK GmbH
Despite the utmost care taken in the preparation of this data sheet, we cannot accept any liability for printing errors or mistakes.

TECTUS - TE 340 3D Energy Kit

EAN	

Finish	Satin Brass (SW 047)
VPE	pack of 1
DIN	non-handed
ITEM NO.	7 400659 0 04701
EAN	

Finish	RAL 9016 Traffic White (SW 070)
VPE	pack of 1
DIN	non-handed
ITEM NO.	7 400659 0 07001
EAN	

Finish	RAL 9005 Matte Black (SW 107)
VPE	pack of 1
DIN	non-handed
ITEM NO.	7 400659 0 10701
EAN	

Finish	Satin Chrome Look (F1) (SW 124)
VPE	pack of 1
DIN	non-handed
ITEM NO.	7 400659 0 12401
EAN	

Finish	Satin Nickel Look (F2) (SW 125)
VPE	pack of 1
DIN	non-handed
ITEM NO.	7 400659 0 12501
EAN	

Finish	Stainless Steel Look (SSL) (SW 126)
VPE	pack of 1
DIN	non-handed
ITEM NO.	7 400659 0 12601
EAN	

Finish	Satin Nickel (SW 144)
VPE	pack of 1
DIN	non-handed

06.11.2026 © SIMONSWERK GmbH
Despite the utmost care taken in the preparation of this data sheet, we cannot accept any liability for printing errors or mistakes.

TECTUS - TE 340 3D Energy Kit

ITEM NO.	7 400659 0 14401
EAN	

Finish	Rustic Umber (SW 156)
VPE	pack of 1
DIN	non-handed
ITEM NO.	7 400659 0 15601
EAN	

Finish	Bronze Metallic (SW 168)
VPE	pack of 1
DIN	non-handed
ITEM NO.	7 400659 0 16801
EAN	

Finish	Bronze Finish (SW 174)
VPE	pack of 1
DIN	non-handed
ITEM NO.	7 400659 0 17401
EAN	

Finish	Bronze Finish Light (SW 175)
VPE	pack of 1
DIN	non-handed
ITEM NO.	7 400659 0 17501
EAN	

Finish	Bronze Finish Dark (SW 176)
VPE	pack of 1
DIN	non-handed
ITEM NO.	7 400659 0 17601
EAN	

06.11.2026 © SIMONSWERK GmbH

Despite the utmost care taken in the preparation of this data sheet, we cannot accept any liability for printing errors or mistakes.