

TE 340 3D FZ

For unrebated residential and heavy-duty doors with casing frames

Notes

Shims for casing strengths 22–28 mm (0.866–1.102") are included.

Combinations

TE 340 3D
TE 340 3D Energy Kit

Item versions

Finish	blue galvanized (SW 010)
VPE	pack of 10
DIN	non-handed
ITEM NO.	5 401380 0 01006
ITEM NO. (SAP)	500004110
EAN	4015471119607

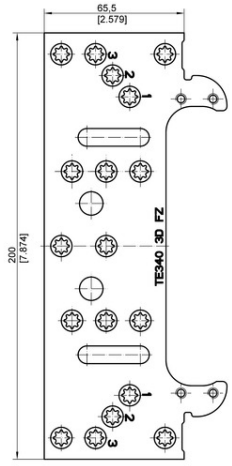

front view

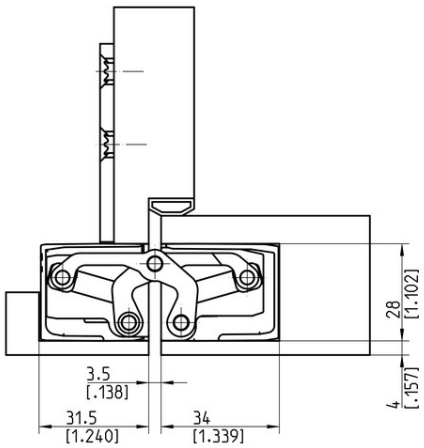

casing wood frame

05.11.2026 © SIMONSWERK GmbH

Despite the utmost care taken in the preparation of this data sheet, we cannot accept any liability for printing errors or mistakes.