TE 540 3D A8

For flush commercial doors with claddings up to 8 mm (0.315")



Product features

- Claddings up to 8 mm (0.315")
- Completely concealed hinge system
- For wood, steel, or aluminum door panels and frames
- Easily adjustable in three dimensions (side +/- 3.0 mm (0.118"), height +/- 3.0 mm (0.118"), compression +/- 1.0 mm (0.039"))
- Maintenance-free slide bearings
- UL listed for 20 minute fire door

Technical data

Property	Value
Load capacity	100.0 kg (220.0 lbs.)
Overall length	200.0 mm (7.874")
Width (door part)	32.0 mm (1.260")
Width (frame part)	32.0 mm (1.260")
Min. door thickness	49.0 mm (1.929") (incl. claddings)
Cutter diameter	24.0 mm
Collar ring diameter	30.0 mm
Opening angle	180°

Quality marks

Certification CE

Certification IFT

Warringtonfire tested

Certification UL

Certification UL (Canada)

Classification key

EN 1935 / EAD

4	7	5	1 *1	1	— *2	1	12

*1 Test evidence for functional doors to be achieved with full door sets and assemblies.

*2 depending on the finish

16.10.2026 © SIMONSWERK GmbH

Despite the utmost care taken in the preparation of this data sheet, we cannot accept any liability for printing errors or mistakes.

TECTUS - TE 540 3D A8

Notes

The load capacity mentioned above refers to the use of 2 hinges per door leaf with a height/width ratio of 2:1.

For a minimum door panel thickness of 40 mm (1-5/8" plus cladding).

For fire rated doors: Check with door manufacturer regarding the usage of additional required intumescent material.

Cover plates for doors without cladding are available upon request.

Square-corner cover plates are available upon request.

Alternatively, the routing can be carried out with a cutter diameter of 3/4" and a collar ring diameter of 1" for imperial templates.

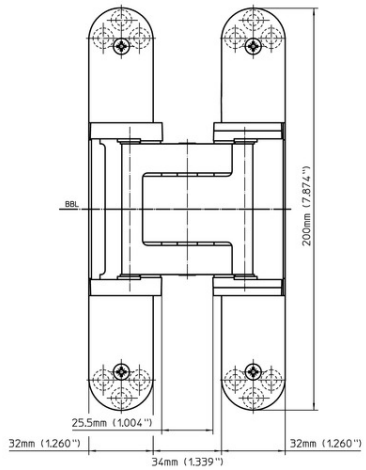

front view

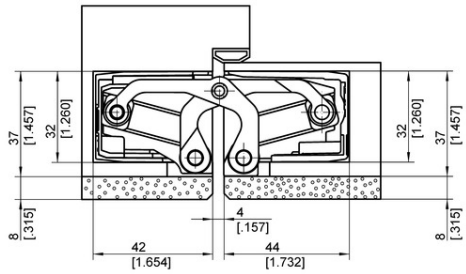

commercial wood frame

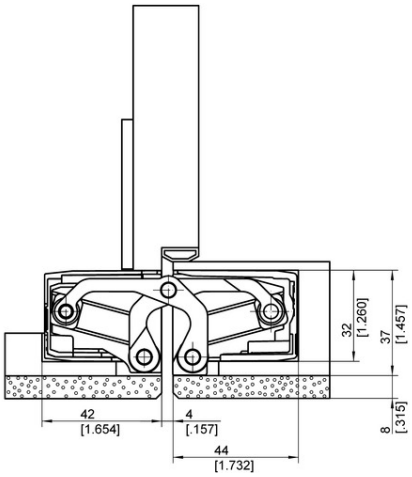

casing wood frame

Installation tools

Universal milling frame

Template 5 250680 5	24 mm router bit / 30 mm collar ring (step 1)
Template 5 250681 5	24 mm router bit / 30 mm collar ring (step 2)
Template 5 250682 5	24 mm router bit / 30 mm collar ring (step 3)
Template 5 250687 5	24 mm router bit / 30 mm collar ring (step 3 (without cladding))
Template 5 251060 5	3/4" router bit / 1" collar ring (step 1)
Template 5 251061 5	3/4" router bit / 1" collar ring (step 2)
Template 5 251068 5	3/4" router bit / 1" collar ring (step 3)
Template 5 251096 5	3/4" router bit / 1" collar ring (step 3 without cladding)

Combinations

TE 540 3D FZ

16.10.2026 © SIMONSWERK GmbH

Despite the utmost care taken in the preparation of this data sheet, we cannot accept any liability for printing errors or mistakes.

TECTUS - TE 540 3D A8

TE 540 3D A8 SZ
TE 540 3D ST
Cover plate set TECTUS A8 radius

Function range

Forced Entry Resistant

Fire Resistant

Smoke Resistant

Soundproof

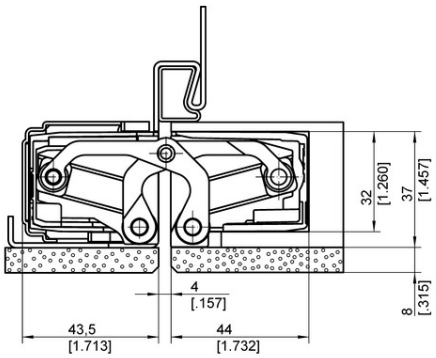

hollow metal frame

Item versions

Finish	Polished Brass (SW 030)
VPE	pack of 2
DIN	non-handed
ITEM NO.	5 400695 0 03002
ITEM NO. (SAP)	500003970
EAN	4015471126513

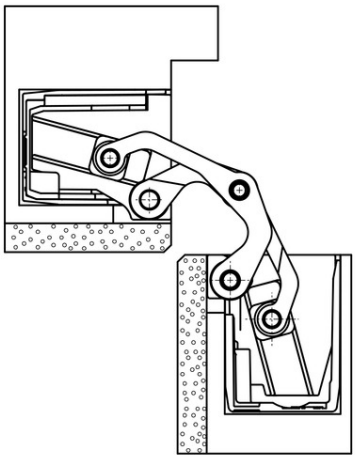

commercial wood frame 90°

Finish	Polished Nickel (SW 038)
VPE	pack of 2
DIN	non-handed
ITEM NO.	5 400695 0 03802
ITEM NO. (SAP)	500003971
EAN	4015471127329

Finish	Satin Brass (SW 047)
VPE	pack of 2
DIN	non-handed
ITEM NO.	5 400695 0 04702
ITEM NO. (SAP)	500003972
EAN	4015471130824

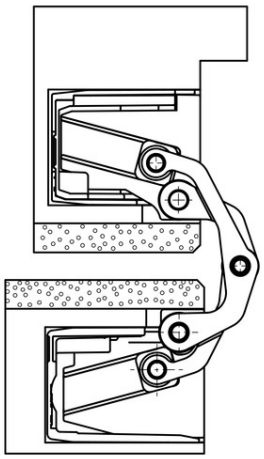

commercial wood frame 180°

Finish	RAL 9016 Traffic White (SW 070)
VPE	pack of 2
DIN	non-handed

16.10.2026 © SIMONSWERK GmbH
Despite the utmost care taken in the preparation of this data sheet, we cannot accept any liability for printing errors or mistakes.

TECTUS - TE 540 3D A8

ITEM NO.	5 400695 0 07002
ITEM NO. (SAP)	500003973
EAN	4015471127367

Finish	RAL 9005 Matte Black (SW 107)
VPE	pack of 2
DIN	non-handed
ITEM NO.	5 400695 0 10702
ITEM NO. (SAP)	500003976
EAN	4015471128265

Finish	Satin Chrome Look (F1) (SW 124)
VPE	pack of 2
DIN	non-handed
ITEM NO.	5 400695 0 12402
ITEM NO. (SAP)	500003977
EAN	4015471128272

Finish	Satin Nickel Look (F2) (SW 125)
VPE	pack of 2
DIN	non-handed
ITEM NO.	5 400695 0 12502
ITEM NO. (SAP)	500003978
EAN	4015471128289

Finish	Stainless Steel Look (SSL) (SW 126)
VPE	pack of 2
DIN	non-handed
ITEM NO.	5 400695 0 12602
ITEM NO. (SAP)	500003979
EAN	4015471128319

Finish	Satin Nickel (SW 144)
VPE	pack of 2
DIN	non-handed
ITEM NO.	5 400695 0 14402
ITEM NO. (SAP)	500003980
EAN	4015471128364

Finish	Satin Chrome (SW 146)
VPE	pack of 2

16.10.2026 © SIMONSWERK GmbH
Despite the utmost care taken in the preparation of this data sheet, we cannot accept any liability for printing errors or mistakes.

TECTUS - TE 540 3D A8

DIN	non-handed
ITEM NO.	5 400695 0 14602
ITEM NO. (SAP)	500003981
EAN	4015471128371

Finish	Rustic Umber (SW 156)
VPE	pack of 2
DIN	non-handed
ITEM NO.	5 400695 0 15602
ITEM NO. (SAP)	500003982
EAN	4015471128401

Finish	Bronze Metallic (SW 168)
VPE	pack of 2
DIN	non-handed
ITEM NO.	5 400695 0 16802
ITEM NO. (SAP)	500003983
EAN	4015471128418

Finish	Bronze Finish (SW 174)
VPE	pack of 2
DIN	non-handed
ITEM NO.	5 400695 0 17402
ITEM NO. (SAP)	500003984
EAN	4015471128425

Finish	Bronze Finish Light (SW 175)
VPE	pack of 2
DIN	non-handed
ITEM NO.	5 400695 0 17502
ITEM NO. (SAP)	500003985
EAN	4015471128432

Finish	Bronze Finish Dark (SW 176)
VPE	pack of 2
DIN	non-handed
ITEM NO.	5 400695 0 17602
ITEM NO. (SAP)	500003986
EAN	4015471128449

16.10.2026 © SIMONSWERK GmbH
Despite the utmost care taken in the preparation of this data sheet, we cannot accept any liability for printing errors or mistakes.