

TE 540 3D A8 SZ

For commercial doors with claddings up to 8 mm (0.315") with steel frames

Combinations

TE 540 3D A8
TE 540 3D A8 Energy Kit

Item versions

Finish	blue galvanized (SW 010)
VPE	pack of 10
DIN	non-handed
ITEM NO.	5 401716 0 01006
ITEM NO. (SAP)	500004147
EAN	4015471133481

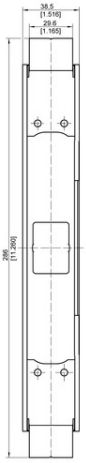

front view

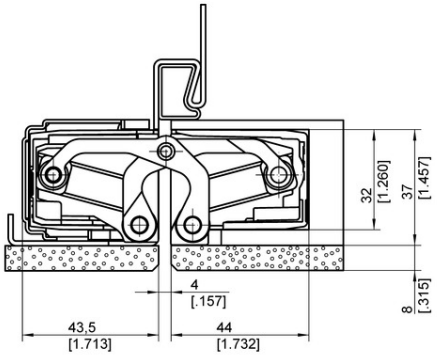

hollow metal frame

11.11.2026 © SIMONSWERK GmbH

Despite the utmost care taken in the preparation of this data sheet, we cannot accept any liability for printing errors or mistakes.

TECTUS - TE 540 3D A8 SZ

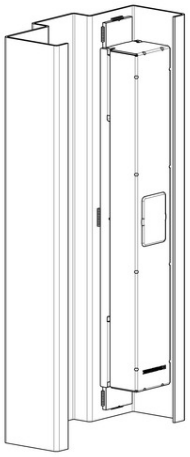

welding recommendation

11.11.2026 © SIMONSWERK GmbH
Despite the utmost care taken in the preparation of this data sheet, we cannot accept any liability for printing errors or mistakes.