

TE 540 3D FZ

For commercial doors with casing frames

Notes

Shims for casing strengths 22–28 mm (0.866–1.102") are included.

Combinations

TE 540 3D
TE 540 3D A8
TE 540 3D Energy Kit
TE 540 3D A8 Energy Kit

Item versions

Finish	blue galvanized (SW 010)
VPE	pack of 10
DIN	non-handed
ITEM NO.	5 400382 0 01006
ITEM NO. (SAP)	500004492
EAN	4015471098957

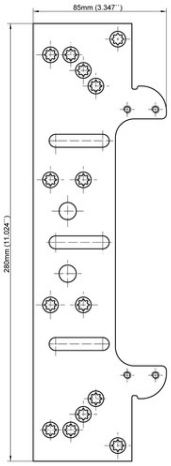

front view

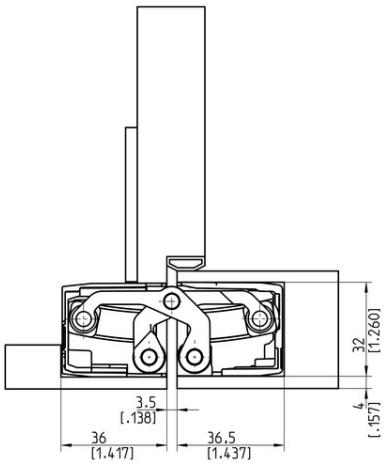

casing wood frame

09.11.2026 © SIMONSWERK GmbH

Despite the utmost care taken in the preparation of this data sheet, we cannot accept any liability for printing errors or mistakes.