

TE 541 3D FVZ SZ

For residential and commercial doors with recessed frame facings with steel frames

Combinations

TE 541 3D FVZ

Item versions

Finish	blue galvanized (SW 010)
VPE	pack of 10
DIN	non-handed
ITEM NO.	5 401718 0 01006
ITEM NO. (SAP)	500004150
EAN	4015471133528

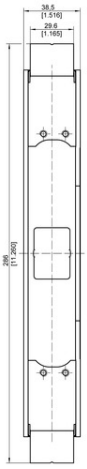

front view

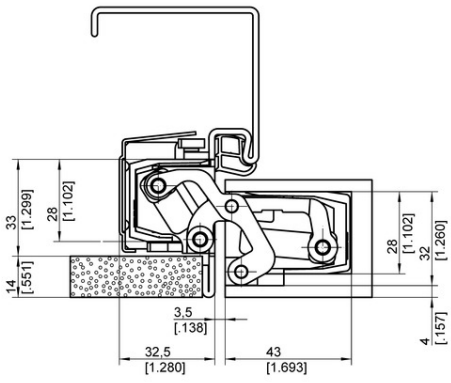

hollow metal frame

16.11.2026 © SIMONSWERK GmbH

Despite the utmost care taken in the preparation of this data sheet, we cannot accept any liability for printing errors or mistakes.

TECTUS - TE 541 3D FVZ SZ

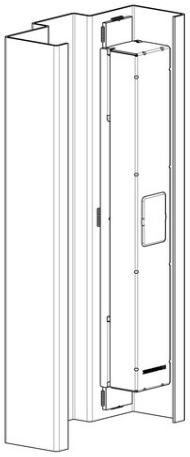

welding recommendation

16.11.2026 © SIMONSWERK GmbH
Despite the utmost care taken in the preparation of this data sheet, we cannot accept any liability for printing errors or mistakes.