TE 640 3D A8

For flush high performance commercial doors with claddings up to 8 mm (0.315")



Product features

- Claddings up to 8 mm (0.315")
- Completely concealed hinge system
- For wood, steel, or aluminum door panels and frames
- Easily adjustable in three dimensions (side +/- 3.0 mm (0.118"), height +/- 3.0 mm (0.118"), compression +/- 1.0 mm (0.039"))
- Maintenance-free slide bearings
- UL listed for 20 minute fire door

Technical data

Property	Value
Load capacity	160.0 kg (352.0 lbs.)
Overall length	240.0 mm (9.449")
Width (door part)	32.0 mm (1.260")
Width (frame part)	32.0 mm (1.260")
Min. door thickness	49.0 mm (1.929") (incl. claddings)
Cutter diameter	24.0 mm
Collar ring diameter	30.0 mm
Opening angle	180°

Quality marks

Certification CE

Certification IFT

Certification UL

Certification UL (Canada)

Classification key

EN 1935 / EAD

4	7	7	1 *1	1	— *2	1	14

*1 Test evidence for functional doors to be achieved with full door sets and assemblies.

*2 depending on the finish

11.11.2026 © SIMONSWERK GmbH

Despite the utmost care taken in the preparation of this data sheet, we cannot accept any liability for printing errors or mistakes.

TECTUS - TE 640 3D A8

Notes

The load capacity mentioned above refers to the use of 2 hinges per door leaf with a height/width ratio of 2:1.

For a minimum door panel thickness of 40 mm (1-5/8" plus cladding).

For fire rated doors: Check with door manufacturer regarding the usage of additional required intumescent material.

Cover plates for doors without cladding are available upon request.

Square-corner cover plates are available upon request.

Alternatively, the routing can be carried out with a cutter diameter of 3/4" and a collar ring diameter of 1" for imperial templates.

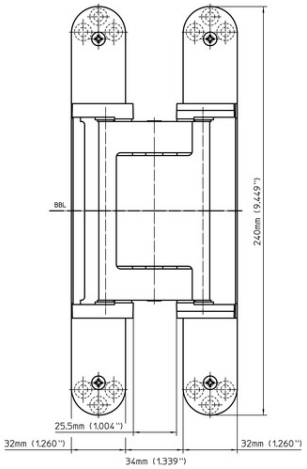

front view

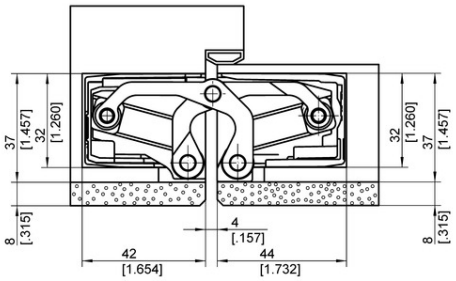

commercial wood frame

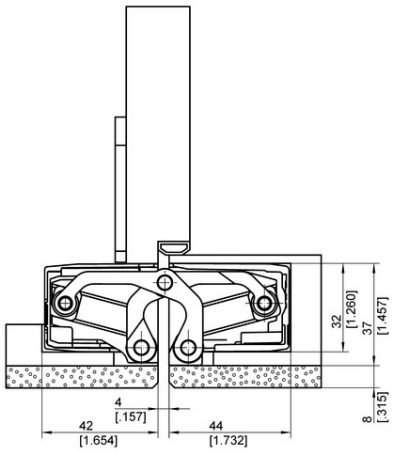

casing wood frame

Installation tools

Universal milling frame

Template 5 250659 5	24 mm router bit / 30 mm collar ring (step 1)
Template 5 250688 5	24 mm router bit / 30 mm collar ring (step 3 (without cladding))
Template 5 250689 5	24 mm router bit / 30 mm collar ring (step 2)
Template 5 250690 5	24 mm router bit / 30 mm collar ring (step 3)
Template 5 251062 5	3/4" router bit / 1" collar ring (step 1)
Template 5 251063 5	3/4" router bit / 1" collar ring (step 2)
Template 5 251069 5	3/4" router bit / 1" collar ring (step 3)
Template 5 251095 5	3/4" router bit / 1" collar ring (step 3 without cladding)

Combinations

TE 640 3D FZ

11.11.2026 © SIMONSWERK GmbH

Despite the utmost care taken in the preparation of this data sheet, we cannot accept any liability for printing errors or mistakes.

TECTUS - TE 640 3D A8

TE 640 3D A8 BW/1
TE 640 3D A8 SZ
TE 640 3D ST
Cover plate set TECTUS A8 radius

Function range

Forced Entry Resistant

Fire Resistant

Smoke Resistant

Soundproof

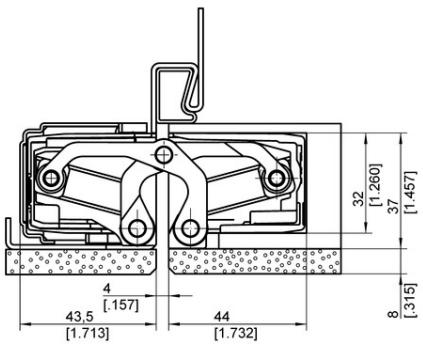

hollow metal frame

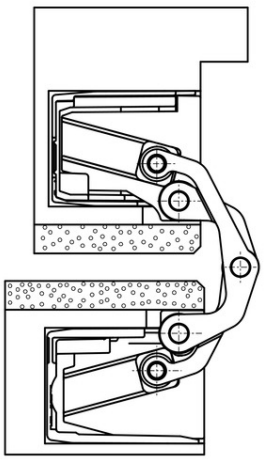

commercial wood frame 180°

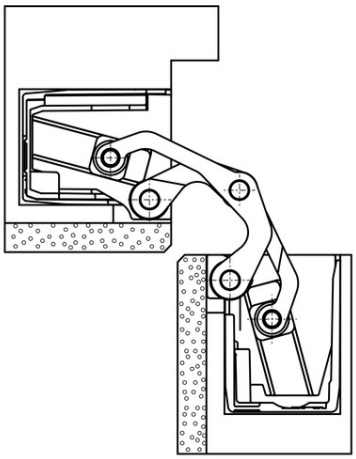

commercial wood frame 90°

Item versions

Finish	Polished Brass (SW 030)
VPE	pack of 2
DIN	non-handed
ITEM NO.	5 400694 0 03002
ITEM NO. (SAP)	500003954
EAN	4015471127305

Finish	Polished Nickel (SW 038)
VPE	pack of 2
DIN	non-handed
ITEM NO.	5 400694 0 03802
ITEM NO. (SAP)	500003955
EAN	4015471127343

Finish	Satin Brass (SW 047)
VPE	pack of 2
DIN	non-handed
ITEM NO.	5 400694 0 04702
ITEM NO. (SAP)	500003956
EAN	4015471130817

Finish	RAL 9016 Traffic White (SW 070)
VPE	pack of 2
DIN	non-handed

11.11.2026 © SIMONSWERK GmbH
Despite the utmost care taken in the preparation of this data sheet, we cannot accept any liability for printing errors or mistakes.

TECTUS - TE 640 3D A8

ITEM NO.	5 400694 0 07002
ITEM NO. (SAP)	500003957
EAN	4015471127473

Finish	RAL 9005 Matte Black (SW 107)
VPE	pack of 2
DIN	non-handed
ITEM NO.	5 400694 0 10702
ITEM NO. (SAP)	500003959
EAN	4015471128043

Finish	Satin Chrome Look (F1) (SW 124)
VPE	pack of 2
DIN	non-handed
ITEM NO.	5 400694 0 12402
ITEM NO. (SAP)	500003960
EAN	4015471128050

Finish	Satin Nickel Look (F2) (SW 125)
VPE	pack of 2
DIN	non-handed
ITEM NO.	5 400694 0 12502
ITEM NO. (SAP)	500003961
EAN	4015471128067

Finish	Stainless Steel Look (SSL) (SW 126)
VPE	pack of 2
DIN	non-handed
ITEM NO.	5 400694 0 12602
ITEM NO. (SAP)	500003962
EAN	4015471128074

Finish	Satin Nickel (SW 144)
VPE	pack of 2
DIN	non-handed
ITEM NO.	5 400694 0 14402
ITEM NO. (SAP)	500003963
EAN	4015471128081

Finish	Satin Chrome (SW 146)
VPE	pack of 2

11.11.2026 © SIMONSWERK GmbH
Despite the utmost care taken in the preparation of this data sheet, we cannot accept any liability for printing errors or mistakes.

TECTUS - TE 640 3D A8

DIN	non-handed
ITEM NO.	5 400694 0 14602
ITEM NO. (SAP)	500003964
EAN	4015471128098

Finish	Rustic Umber (SW 156)
VPE	pack of 2
DIN	non-handed
ITEM NO.	5 400694 0 15602
ITEM NO. (SAP)	500003965
EAN	4015471128135

Finish	Bronze Metallic (SW 168)
VPE	pack of 2
DIN	non-handed
ITEM NO.	5 400694 0 16802
ITEM NO. (SAP)	500003966
EAN	4015471128142

Finish	Bronze Finish (SW 174)
VPE	pack of 2
DIN	non-handed
ITEM NO.	5 400694 0 17402
ITEM NO. (SAP)	500003967
EAN	4015471128173

Finish	Bronze Finish Light (SW 175)
VPE	pack of 2
DIN	non-handed
ITEM NO.	5 400694 0 17502
ITEM NO. (SAP)	500003968
EAN	4015471128180

Finish	Bronze Finish Dark (SW 176)
VPE	pack of 2
DIN	non-handed
ITEM NO.	5 400694 0 17602
ITEM NO. (SAP)	500003969
EAN	4015471128203

11.11.2026 © SIMONSWERK GmbH
Despite the utmost care taken in the preparation of this data sheet, we cannot accept any liability for printing errors or mistakes.