

TE 640 3D SZ

For high performance commercial doors
with steel frames

Combinations

TE 640 3D
TE 640 3D Energy Kit

Item versions

Finish	blue galvanized (SW 010)
VPE	pack of 10
DIN	non-handed
ITEM NO.	5 401715 0 01006
ITEM NO. (SAP)	500004145
EAN	4015471133498

Finish	Stainless Steel untreated (SW 041)
VPE	pack of 10
DIN	non-handed
ITEM NO.	5 401715 0 04106
ITEM NO. (SAP)	500004146
EAN	4015471143220

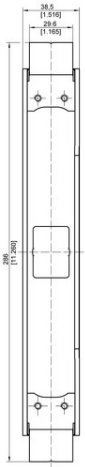

front view

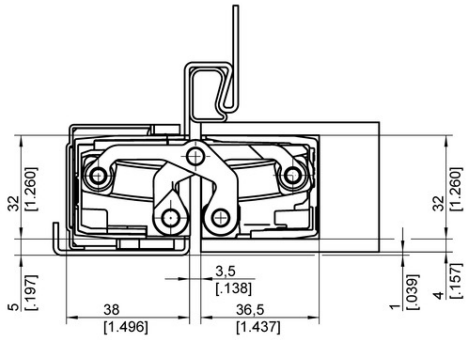

hollow metal frame

12.11.2026 © SIMONSWERK GmbH

Despite the utmost care taken in the preparation of this data sheet, we cannot accept any liability for printing errors or mistakes.

TECTUS - TE 640 3D SZ

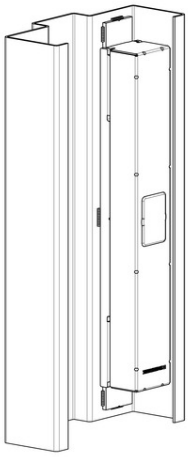

welding recommendation

12.11.2026 © SIMONSWERK GmbH
Despite the utmost care taken in the preparation of this data sheet, we cannot accept any liability for printing errors or mistakes.