LEVER BOLT

STAINLESS 304 STEEL | 3.5×20 STAINLESS

HR-35

- Large lever allows easy operation.
- Supplied with mortise and surface strike.

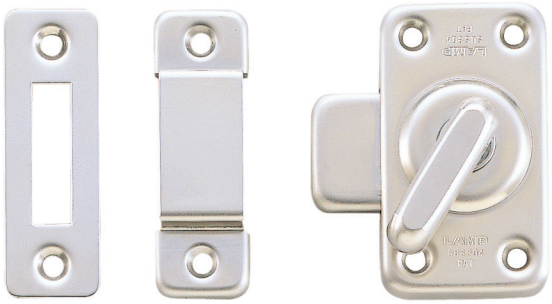

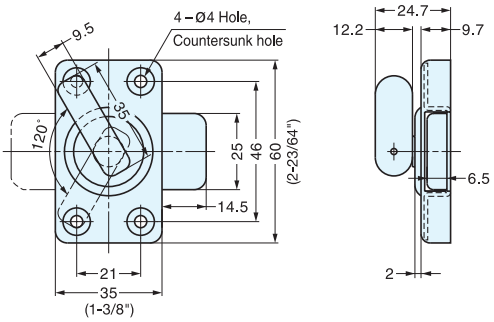

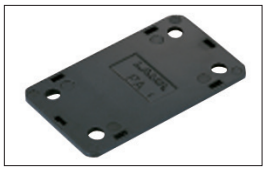

HR35SP-B
(2 mm Spacer: Sold separately)

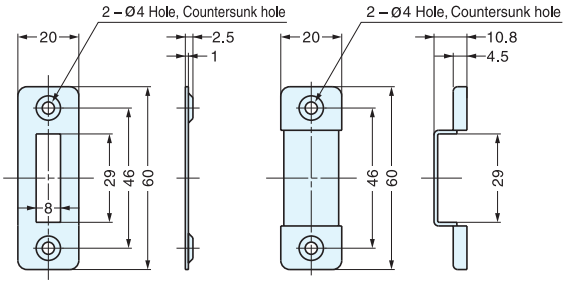

Item No.	Weight (g)	Box (pcs)	Carton (pcs)
HR-35	108	10	100

SLIDING DOOR LATCH

3.5×20 STAINLESS

HC-30R

- Sliding door latch for thick doors 28-52 mm (1-1/8"~2").
- Thumbturn on both sides for easy access.
- Slim design suitable for various applications.
- Non-Handed.
- For sliding doors only.
- Includes screws.

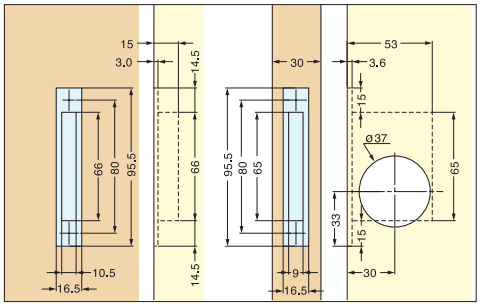

Bore Dimensions

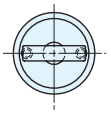

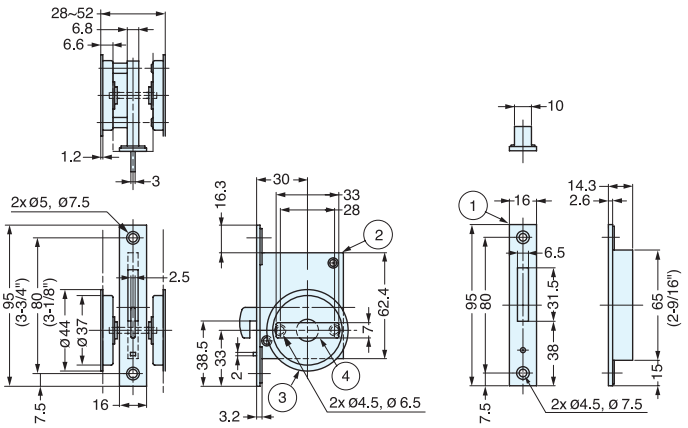

Item No.	Weight (g)	Box (pcs)	Carton (pcs)
HC-30R	283	5	50

No.	Parts Name	Material	Finish
①	Front Plate	304 Stainless Steel	Satin
②	Body	Steel	-
③	Thumbturn	304 Stainless Steel	Satin
④	Knob	Zinc Alloy	Chrome